Electrical Measurements

Code: EPM1202

Lecture: 4 Tutorial: 2 Total: 6

Dr. Ahmed Mohamed Azmy

Department of Electrical Power and Machine Engineering

Tanta University - Egypt

Faculty of Engineering

Tanta University

Self generating transducers

Variable Inductance Type Transducer

The variation of inductance can be made by the variation of self inductance, mutual inductance and the eddy current production

The output of the transducer can be measured directly in the form of inductance variation or in the form of voltage variation

When working on principle of changing self inductance, the self inductance of a coil is given as

$$L = \frac{N^2}{R}$$

Self generating transducers

Variable Inductance Type Transducer

Change of Self Inductance

$$L = \frac{N^2}{R}$$

$$R = \frac{\ell}{\mu A}$$

$$L = \frac{N^2 \mu A}{\ell} = N^2 \mu \frac{A}{\ell}$$

"A" is the of cross section area of the magnetic path

"ℓ" is the length of the magnetic path

"μ" is the permeability

Self generating transducers

Variable Inductance Type Transducer

Change of mutual Inductance

$$M = k\sqrt{L_1 L_2}$$

Producing eddy currents:

If a conducting plate is placed near a coil carrying alternating current, eddy currents are produced in the conducting plate

Self generating transducers

Capacitive Transducer

$$C = \frac{\varepsilon\ A}{d} = \frac{\varepsilon_o\ \varepsilon_r\ A}{d}$$

One plate of the capacitor is movable and hence, the distance between the two plates is varied

The variation of the distance between the plates causes a capacitance variation

$$\Delta C = \frac{\varepsilon_o\ \varepsilon_r\ A}{\Delta d}$$

Self generating transducers

Capacitive Transducer

Changing dielectric constant type of capacitive transducers

Changing distance between the plates of capacitive Transducers

Changing area of the plates of capacitive transducers

Self generating transducers

Changing dielectric constant:

The variation of the measured quantity changes the value of the dielectric constant

Used to measure levels of liquids in container, resulting in a change in the dielectric constant

This principle can also be used for measurement of humidity and moisture content of the air

Changing area of the plates:

Used for measurement of the torque on the shaft

Changing distance between the plates

Used to measure pressure, velocity, acceleration etc

The cathode ray oscilloscope

The Cathode Ray Oscilloscope "**CRO**" is used to observe and measure waveforms of voltage, current, frequency, phase and periodic time

During the horizontal movement of luminous point, it is deflected vertically proportionally to the value of the detected signal

The horizontal movement is obtained by a sweep oscillator generating a sawtooth signal

The cathode ray oscilloscope

If the frequency of the signal is larger than several Hz due to the inertia of our eyesight it is not possible to see such a picture of the signal

The main function of the oscilloscope is to somehow stop the picture on the screen

A variable switch is used among the time base to gives the sweep speed as time per centimetre

Block diagram of a typical oscilloscope

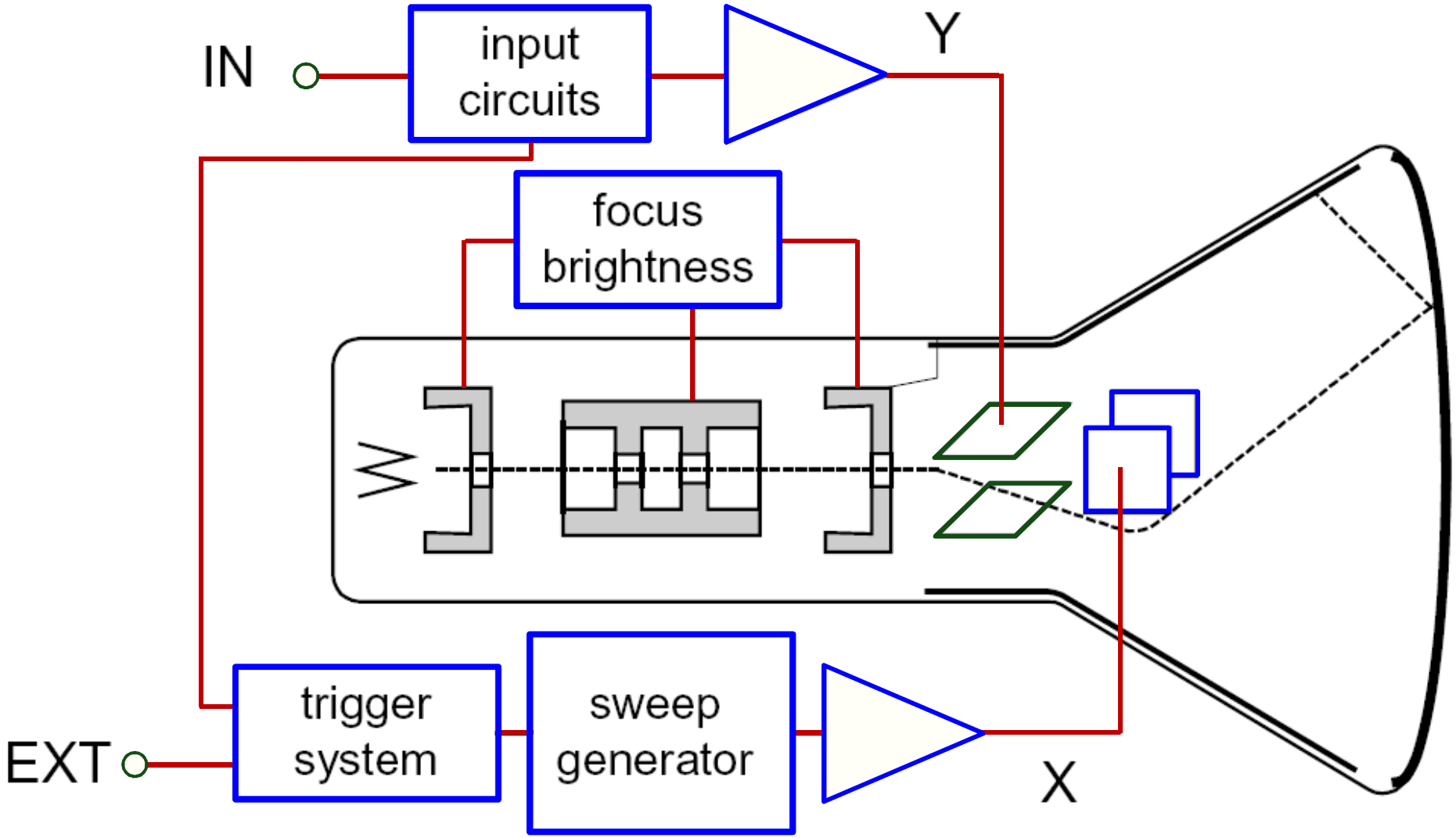

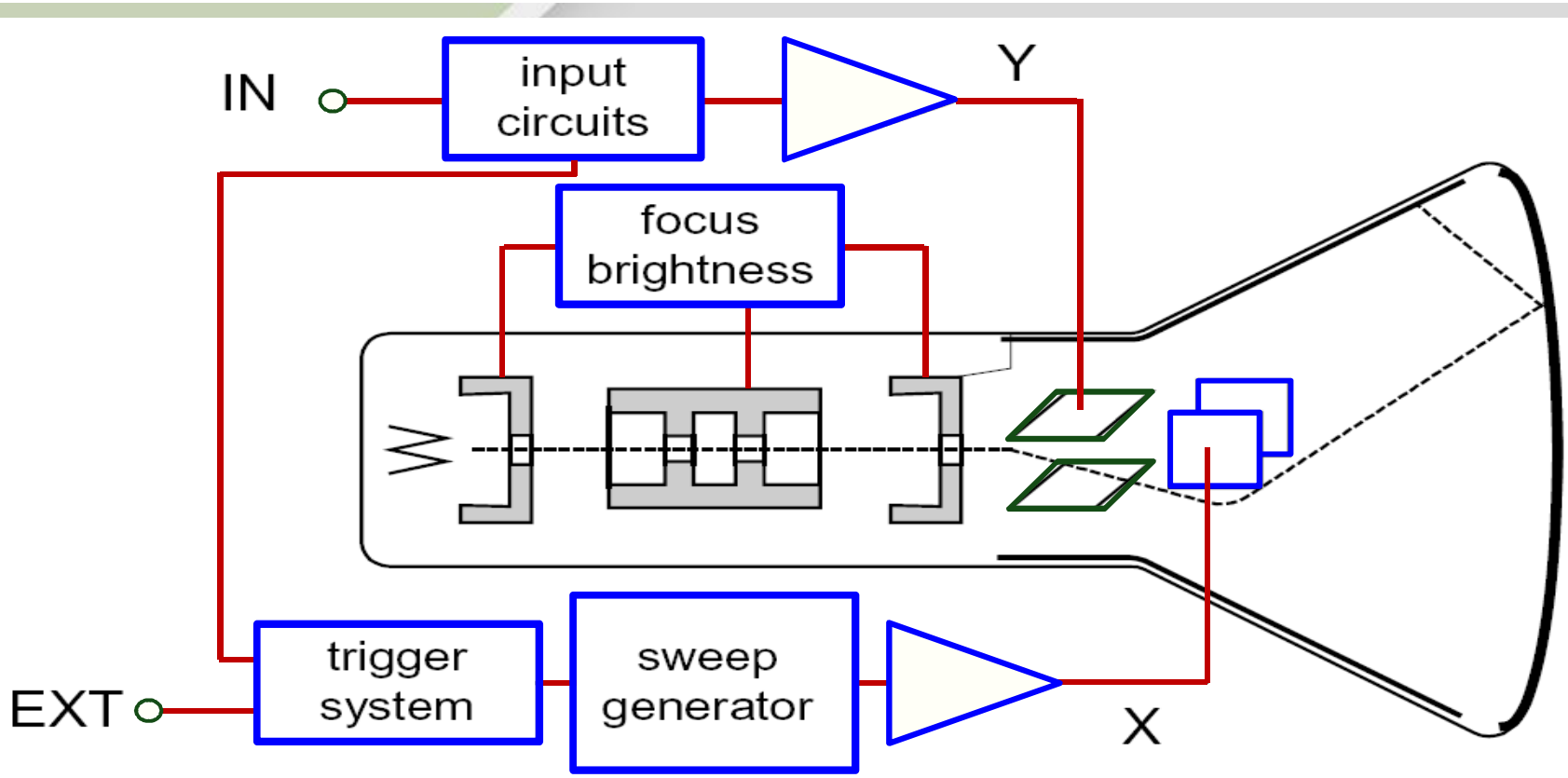

The deflection system of the electron beam consists of two pairs of plates: horizontal and vertical ones

The electrostatic force depending on the voltage causes the deflection of electron beam and the amount of deflection is proportional to the applied voltage

Other variables, such as currents and frequency, can be measured in an indirect manner using suitable arrangements

The display is divided in small areas called pixels

The response of the oscilloscope is very fast due to the absence of any moving parts

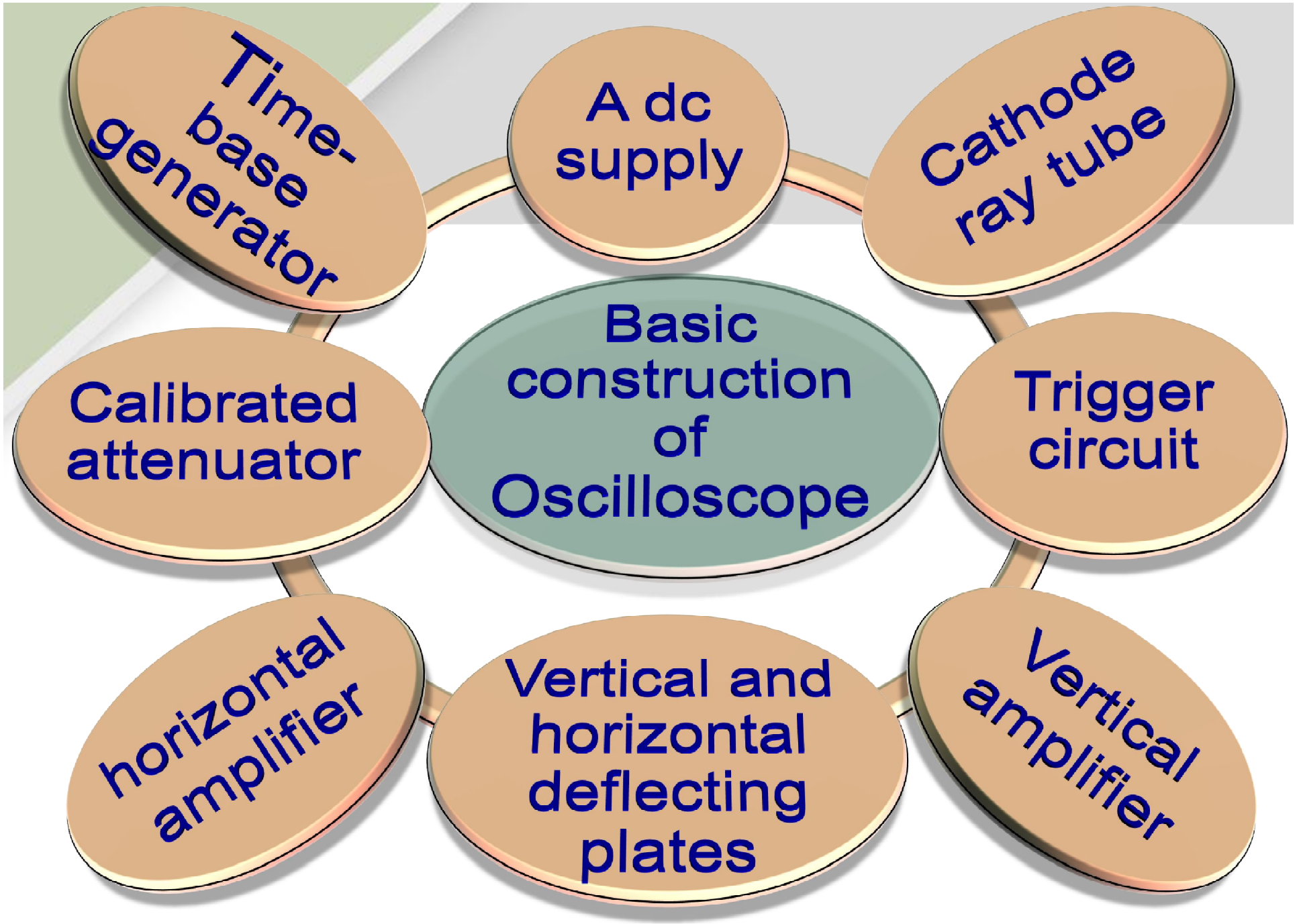
Basic construction of Oscilloscope
A dc supply
Cathode ray tube
Trigger circuit
Vertical amplifier
Vertical and horizontal deflecting plates
horizontal amplifier
Calibrated attenuator
Time-base generator

Setting up an oscilloscope

Switch on the oscilloscope and wait until it warms up and do not connect the input lead at this stage

Set the oscilloscope to the required display channel

Set the AC/GND/DC switch (by the Y INPUT) to DC

Set the vertical volts/division scale and position controls to mid–range positions

Setting up an oscilloscope

Set the Y AMPLIFIER

Set the TIMEBASE

Adjust Y SHIFT (up/down) and X SHIFT (left/right) to give a trace across the middle of the screen

Adjust INTENSITY (brightness) and FOCUS to give a bright, sharp trace

Setting up an oscilloscope

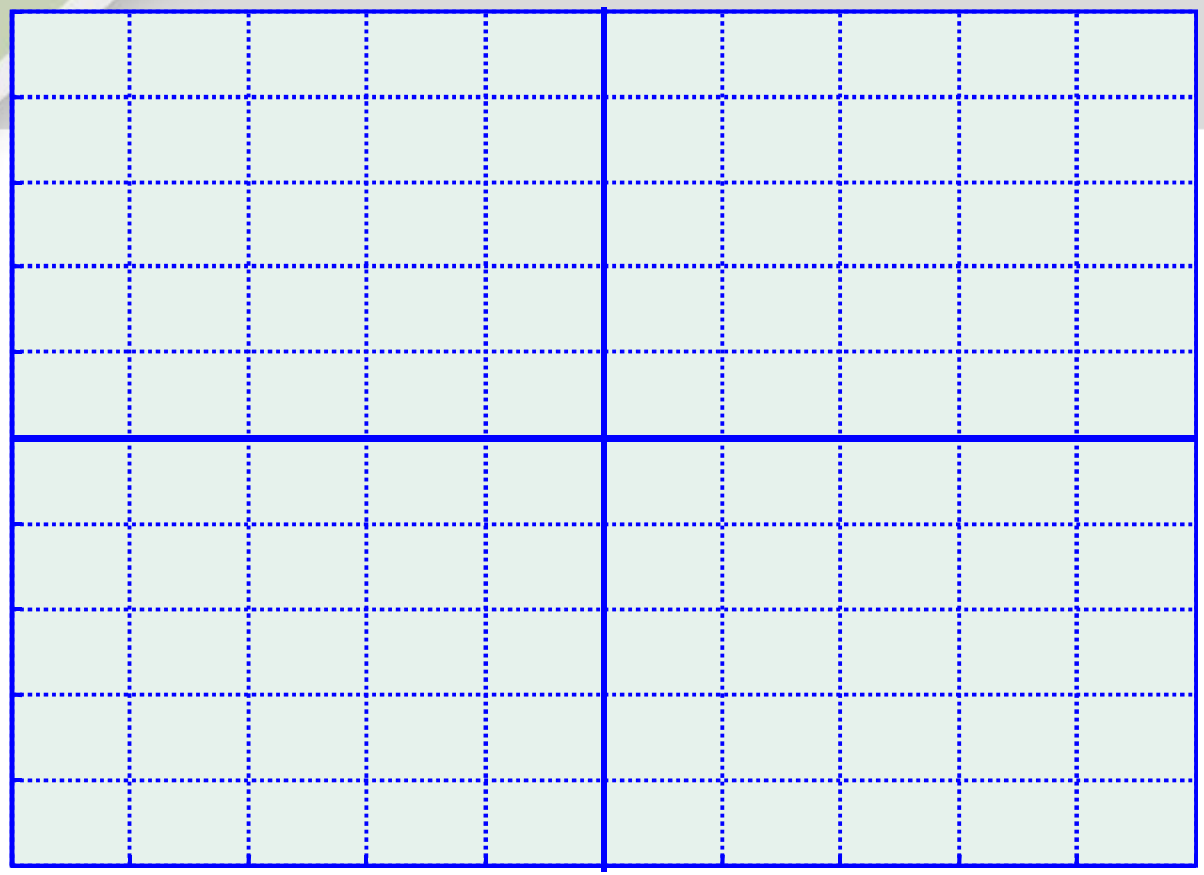

Set the horizontal time/division and position controls according to the measured signal

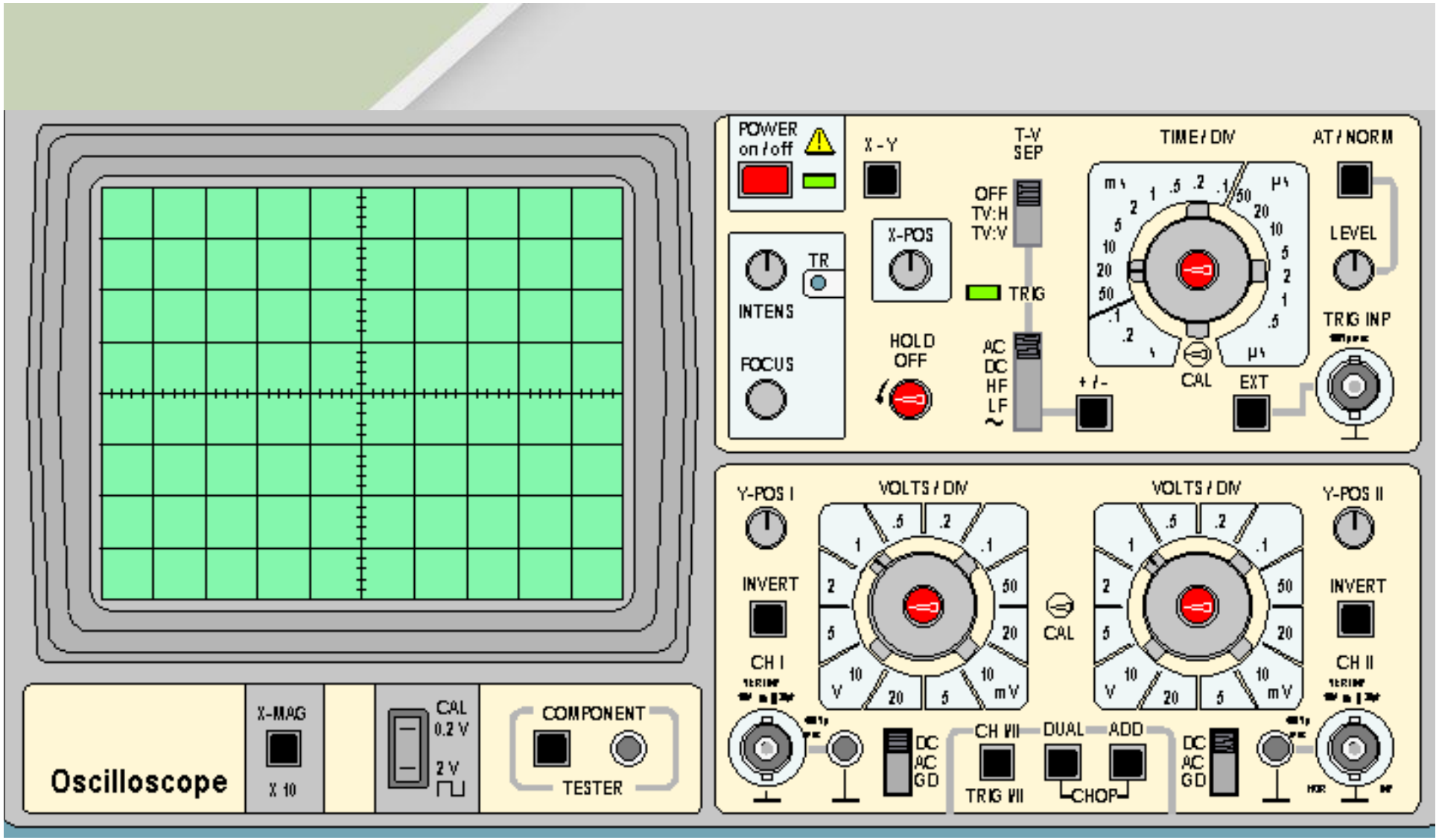
POWER
on / off
X - Y
T-V
SEP
TIME / DIV
AT / NORM
OFF
TV:H
TV:V
X-POS
LEVEL
TR
INTENS
TRIG
TRIG INP
FOCUS
HOLD
OFF
AC
DC
HF
LF
+ / -
CAL
EXT
Y-POS I
VOLTS / DIV
VOLTS / DIV
Y-POS II
INVERT
CAL
INVERT
CH I
CH II
X-MAG
X 10
CAL
0.2 V
2 V
COMPONENT
TESTER
Oscilloscope
DC
AC
GD
CH I/II
DUAL
ADD
TRIG I/II
CHOP
DC
AC
GD

Measuring voltage and time period

The illustration on the oscilloscope screen is a graph of voltage against time

The shape of this graph is defined by the nature of the input signal

Measuring voltage and time period

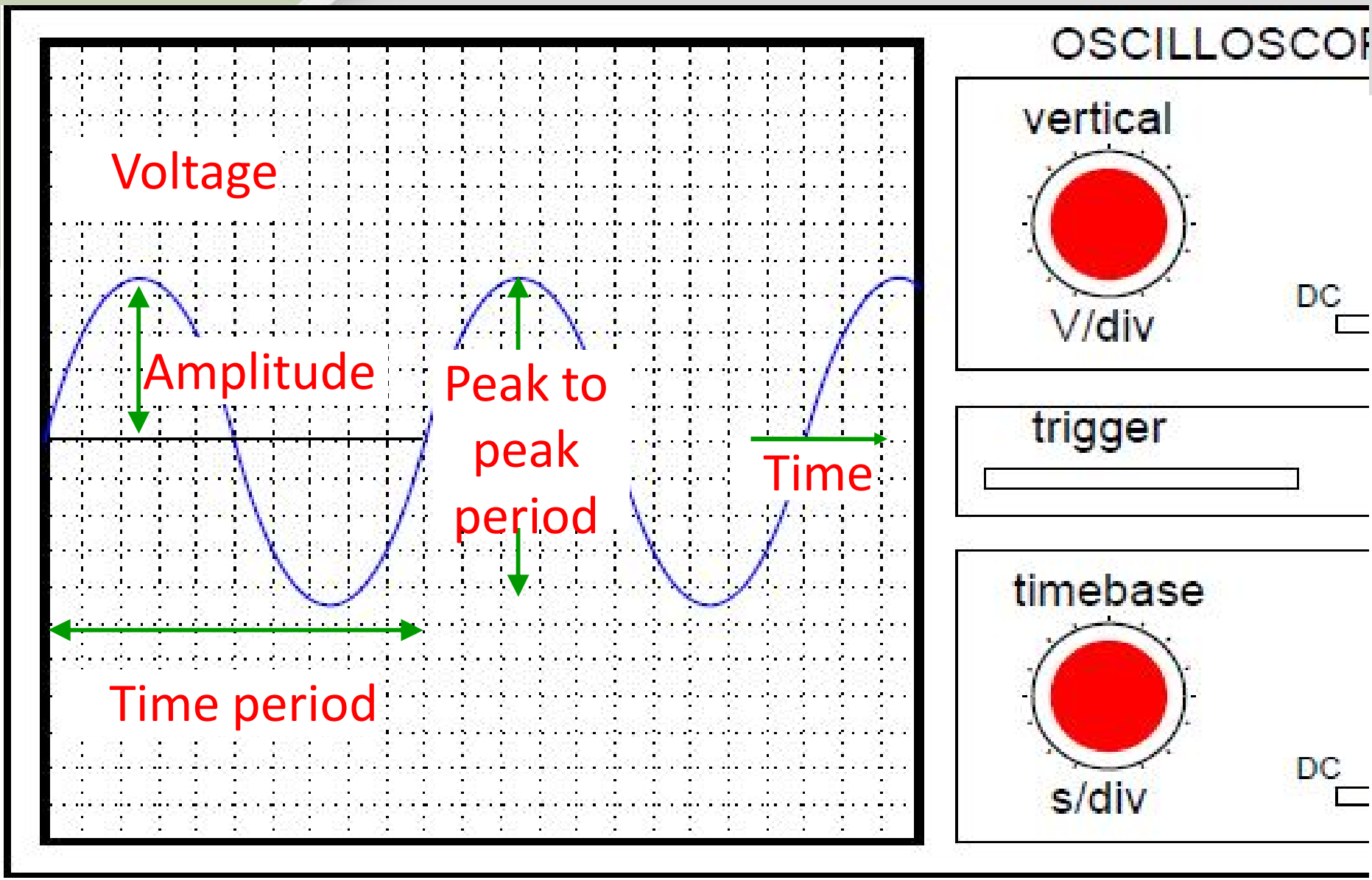

Measuring voltage and time period

It is possible to use **dual-trace** oscilloscopes that have a mode switch to select either channel alone, both channels, or an X-Y display

It is possible to connect another signal to horizontal deflection system to display a function $Y=f(X)$

To illustrate the hysteresis loop (B-H loop), a signal proportional to magnetic field strength is connected to the horizontal plates, while a signal proportional to the flux density is used in the vertical pair of the plates

Measuring current and frequency

To measure current, it is required to measure the voltage across a known resistance

It is possible to measure current in terms of voltage (using 1Ω resistor is recommended)

Sometimes, a resistor is inserted to the circuit to accomplish this process

Important here is to use a small resistance that will not affect the operation of the original circuit.

Measuring current and frequency

The measurement of the frequency is based on measuring the time period of the displayed waveform

The number of horizontal divisions of one complete cycle is defined and the frequency of the wave is then calculated

$$f = \frac{1}{T}$$